ITEM NO.	PART NUMBER	DESCRIPTION	QTY.
1	TE-20003-01	0.5 AC Lower Face	1
2	TE-20003-02	025 BC plywood	1
3	TE-20003-03	0.5 AC face back goal	1
4	TE-20003-04	2x4x48 pine	8
5	TE-20003-05	2x4x75 pine	4
6	TE-20003-06	2x4x37 pine	4
7	TE-20003-07	050 AC Side	4
8	TE-20003-08	050AC deflector	1
9	TE-20003-09	050AC roof	1
10	TE-20003-10	050 gusset	4
11	TE-20003-11	2x4x43	2
12	Hook_2_48	Hook_2_48	2
13	TeeNut_.25_20	Soft wood fiber tee nut	6
14	Vision_PowerPort	2" wide 3m vision tape	3
15	hex_.25_20_3.5	Steel Hex Head Screw, 1/4"-20 x 3.5 long, fully threaded	6

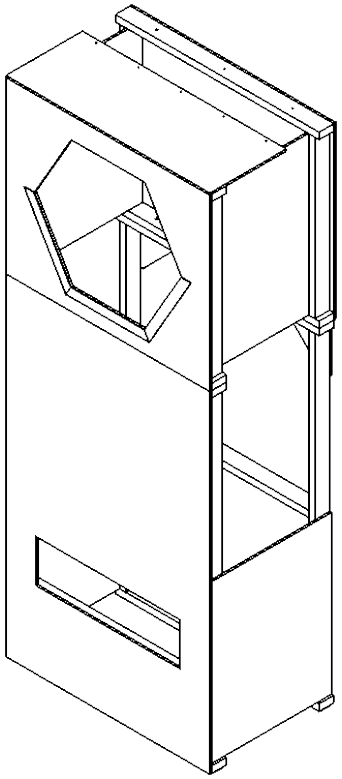

Material	QTY
15/32 " ACor CDX Plywood	4 sheets
2"x4"x8' Pine	10
2" Hook	96"
2" Vision Tape	54"
wood screw 1.25"	~110
wood screw 2.5	~40
50lb Cable tie	10
1/4-20 x 3.5" bolt	6
1/4-20 Softwood T nut	6

PROPRIETARY AND CONFIDENTIAL

THE INFORMATION CONTAINED IN THIS DRAWING IS THE SOLE PROPERTY OF ***FIRST®***. ANY REPRODUCTION IN PART OR AS A WHOLE WITHOUT THE WRITTEN PERMISSION OF ***FIRST®*** IS PROHIBITED.

NEXT ASSY | USED ON

APPLICATION

UNLESS OTHERWISE SPECIFIED:

DIMENSIONS ARE IN INCHES
TOLERANCES:
FRACTIONAL ±1/16
ANGULAR: MACH ±1° BEND ±1°
TWO PLACE DECIMAL ±.01
THREE PLACE DECIMAL ±.001

INTERPRET GEOMETRIC TOLERANCING PER:

MATERIAL

FINISH

DO NOT SCALE DRAWING

	NAME	DATE
DRAWN		
CHECKED		
ENG APPR.		
MFG APPR.		
Q.A.		

COMMENTS:

FIRST ROBOTICS COMPETITION

SOLIDWORKS Modeling Solutions Partner

TITLE:

TE Power Port

SIZE	DWG. NO.	REV
A	TE-20003	

SCALE: 1:32 | WEIGHT: | SHEET 1 OF 16

Front Lower Frame Assembly

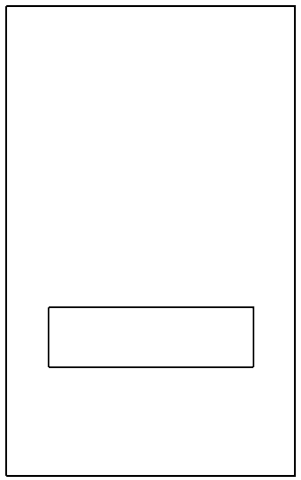

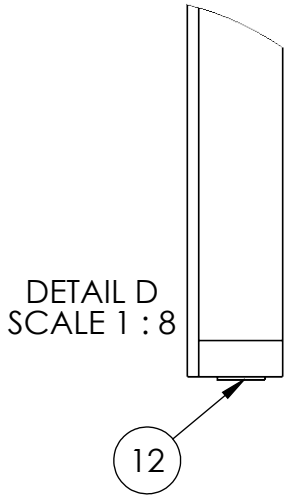

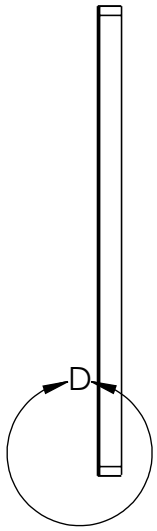

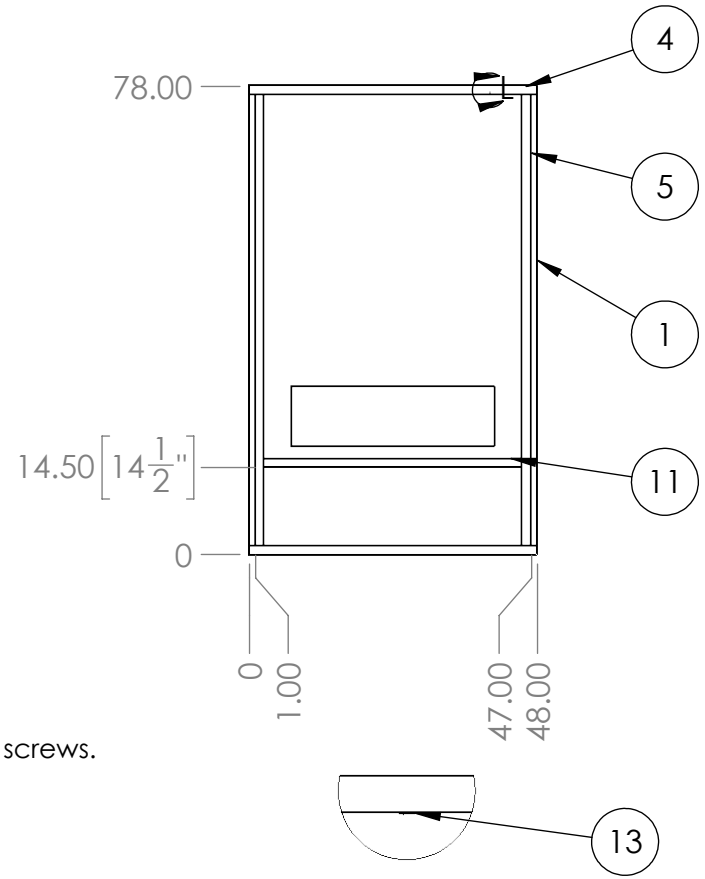

Notes:

1. Attach (4), (5), (11) together to form a frame. Pre-drill and use 2.5" wood screws.
2. Attach (12) to the bottom of the frame use stapels to hold in place
3. Attach (1) to the frame. Pre-drill and use 1.25" wood screws.
4. Insert (13) into the outer most drilled holes of (4)

PROPRIETARY AND CONFIDENTIAL

THE INFORMATION CONTAINED IN THIS DRAWING IS THE SOLE PROPERTY OF ***FIRST®***. Any REPRODUCTION IN PART OR AS A WHOLE WITHOUT THE WRITTEN PERMISSION OF ***FIRST®*** IS PROHIBITED.

NEXT ASSY	USED ON
APPLICATION	

UNLESS OTHERWISE SPECIFIED:

DIMENSIONS ARE IN INCHES
TOLERANCES:
FRACTIONAL ±1/16
ANGULAR: MACH ±1° BEND ±1°
TWO PLACE DECIMAL ±.01
THREE PLACE DECIMAL ±.001

INTERPRET GEOMETRIC TOLERANCING PER:

MATERIAL

FINISH

DO NOT SCALE DRAWING

	NAME	DATE
DRAWN		
CHECKED		
ENG APPR.		
MFG APPR.		
Q.A.		

COMMENTS:

FIRST ROBOTICS COMPETITION

SOLIDWORKS Modeling Solutions Partner

TITLE:

TE Power Port

SIZE	DWG. NO.	REV
A	TE-20003	

SCALE: 1:32 WEIGHT: SHEET 2 OF 16

Back Lower Frame Assembly

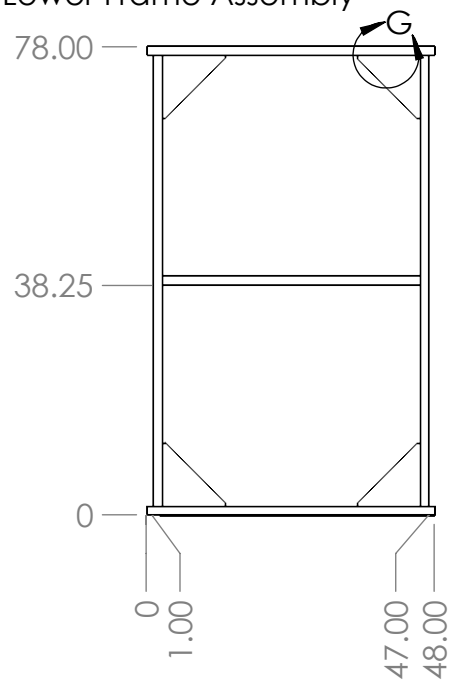

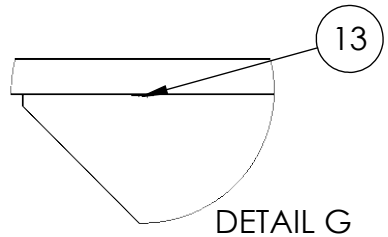

DETAIL G
SCALE 1 : 8

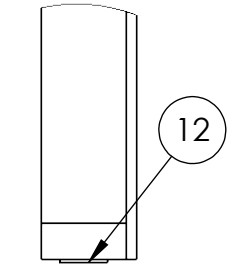

DETAIL F
SCALE 1 : 8

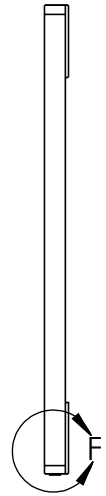

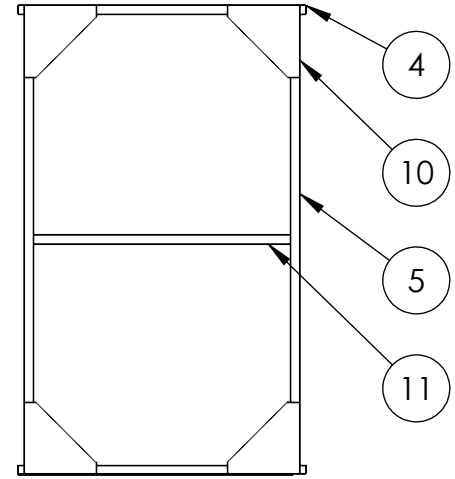

Notes:

1. Attach (4), (5) and (11) to form a frame. Pre-drill and use 2.5" wood screws
2. Attach (12) to the bottom of (4).
3. Attach (10) to the frame. Pre-drill and use 1.25" wood screws
4. Insert (13) to the two outside holes of (4)

		UNLESS OTHERWISE SPECIFIED:		NAME	DATE
		DIMENSIONS ARE IN INCHES TOLERANCES: FRACTIONAL ±1/16 ANGULAR: MACH ±1° BEND ±1° TWO PLACE DECIMAL ±.01 THREE PLACE DECIMAL ±.001	DRAWN		
			CHECKED		
			ENG APPR.		
			MFG APPR.		
		INTERPRET GEOMETRIC TOLERANCING PER:	Q.A.		
		MATERIAL	COMMENTS:		
NEXT ASSY	USED ON	FINISH			
APPLICATION		DO NOT SCALE DRAWING			

PROPRIETARY AND CONFIDENTIAL

THE INFORMATION CONTAINED IN THIS DRAWING IS THE SOLE PROPERTY OF ***FIRST®***. Any REPRODUCTION IN PART OR AS A WHOLE WITHOUT THE WRITTEN PERMISSION OF ***FIRST®*** IS PROHIBITED.

FIRST ROBOTICS COMPETITION

SOLIDWORKS Modeling Solutions Partner

TITLE:

TE Power Port

SIZE	DWG. NO.	REV
A	TE-20003	

SCALE: 1:32 | WEIGHT: | SHEET 3 OF 16

Front Upper Frame Assembly

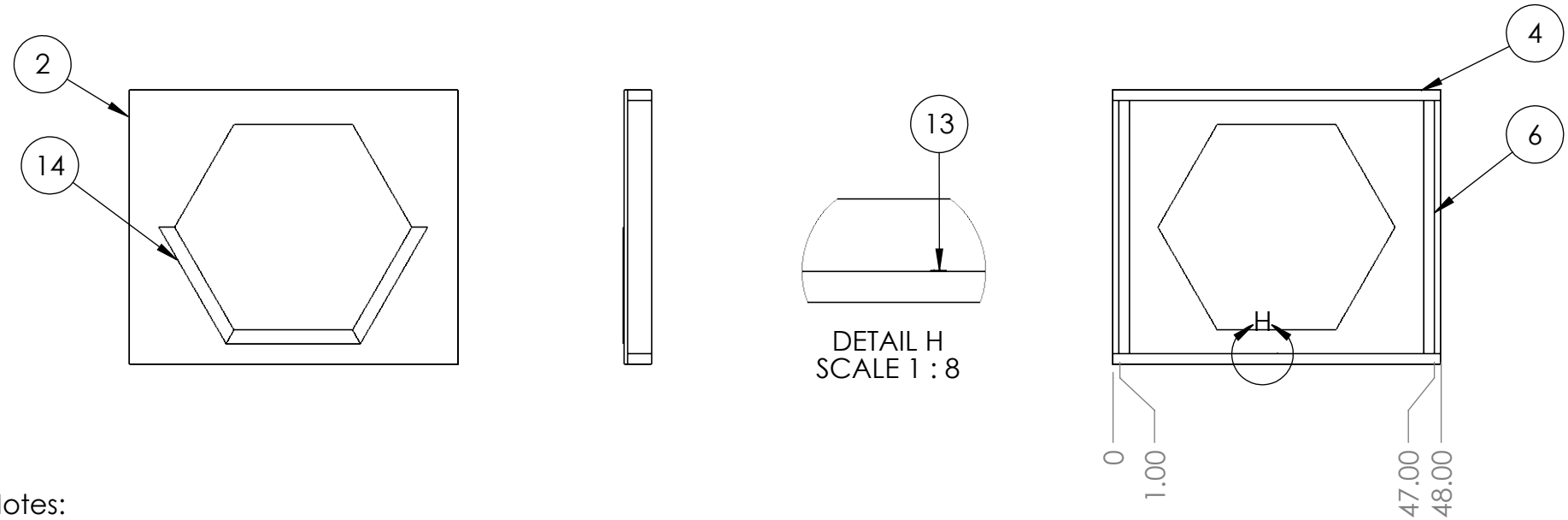

Notes:

1. Attach (14) to (2) to lower portion of opening.
2. Attach (4) and (6) together to form a frame. Pre-drill and use 2.5" wood screws
3. Attach (2) to the frame. Pre-drill and use 1.25" wood screws
4. Insert (13) to the center hole of (4) on the lower portion of the fame

PROPRIETARY AND CONFIDENTIAL

THE INFORMATION CONTAINED IN THIS DRAWING IS THE SOLE PROPERTY OF ***FIRST®***. Any REPRODUCTION IN PART OR AS A WHOLE WITHOUT THE WRITTEN PERMISSION OF ***FIRST®*** IS PROHIBITED.

NEXT ASSY	USED ON
APPLICATION	

UNLESS OTHERWISE SPECIFIED:

DIMENSIONS ARE IN INCHES
TOLERANCES:
FRACTIONAL ±1/16
ANGULAR: MACH ±1° BEND ±1°
TWO PLACE DECIMAL ±.01
THREE PLACE DECIMAL ±.001

INTERPRET GEOMETRIC TOLERANCING PER:

MATERIAL

FINISH

DO NOT SCALE DRAWING

	NAME	DATE
DRAWN		
CHECKED		
ENG APPR.		
MFG APPR.		
Q.A.		

COMMENTS:

FIRST ROBOTICS COMPETITION

SOLIDWORKS Modeling Solutions Partner

TITLE:

TE Power Port

SIZE	DWG. NO.	REV
A	TE-20003	

SCALE: 1:32 WEIGHT: SHEET 4 OF 16

Back Upper Frame Assembly

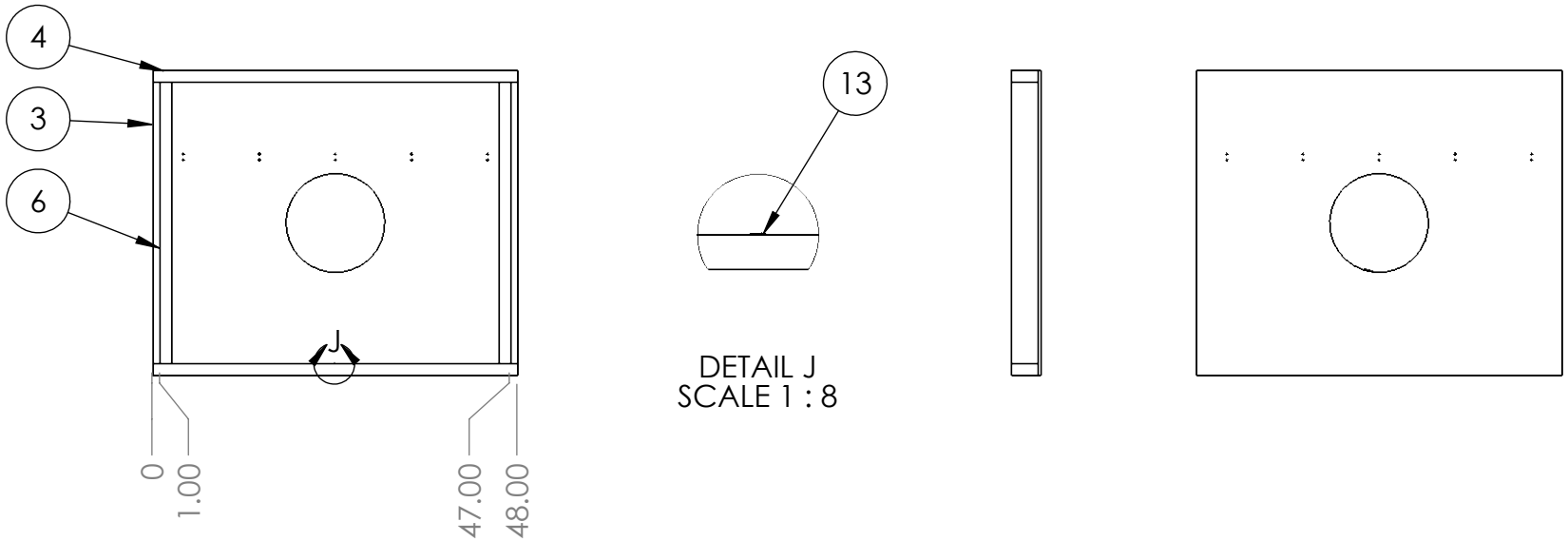

Notes:

1. Attach (4) and (6) together to form a frame. Pre-drill and use 2.5" wood screw.
2. Attach (3) to the frame. Pre-drill and use 1.25" wood screw.
3. Insert (13) to (4) in the center hole.

PROPRIETARY AND CONFIDENTIAL

THE INFORMATION CONTAINED IN THIS DRAWING IS THE SOLE PROPERTY OF ***FIRST®***. Any REPRODUCTION IN PART OR AS A WHOLE WITHOUT THE WRITTEN PERMISSION OF ***FIRST®*** IS PROHIBITED.

NEXT ASSY	USED ON
APPLICATION	

UNLESS OTHERWISE SPECIFIED:

DIMENSIONS ARE IN INCHES
TOLERANCES:
FRACTIONAL ±1/16
ANGULAR: MACH ±1° BEND ±1°
TWO PLACE DECIMAL ±.01
THREE PLACE DECIMAL ±.001

INTERPRET GEOMETRIC TOLERANCING PER:

MATERIAL

FINISH

DO NOT SCALE DRAWING

	NAME	DATE
DRAWN		
CHECKED		
ENG APPR.		
MFG APPR.		
Q.A.		

COMMENTS:

FIRST ROBOTICS COMPETITION

SOLIDWORKS Modeling Solutions Partner

TITLE:

TE Power Port

SIZE	DWG. NO.	REV
A	TE-20003	

SCALE: 1:32 WEIGHT: SHEET 5 OF 16

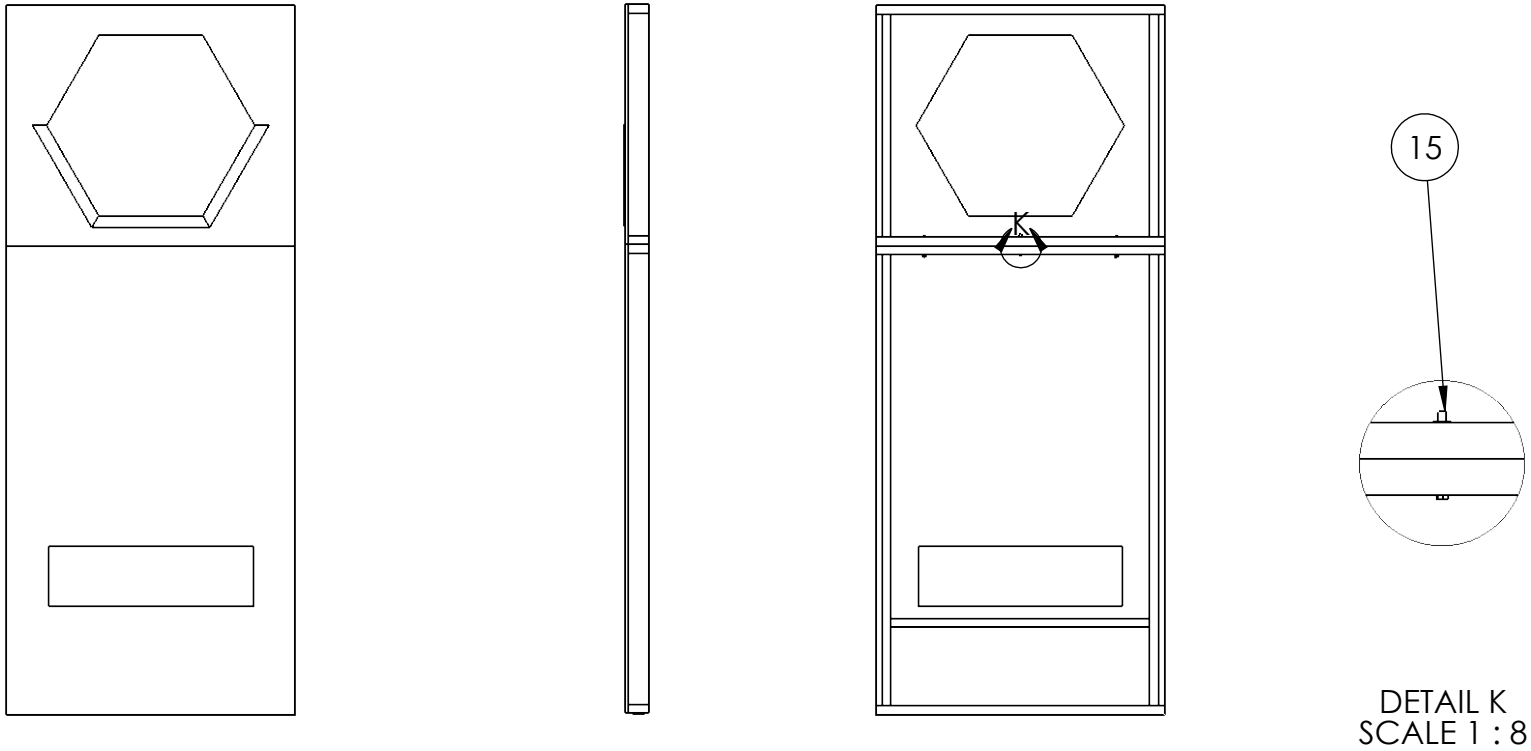

Note:

1. Attach the Front Lower Frame Assembly and Front Upper Frame Assembly together with (15)

PROPRIETARY AND CONFIDENTIAL

THE INFORMATION CONTAINED IN THIS DRAWING IS THE SOLE PROPERTY OF ***FIRST®***. Any REPRODUCTION IN PART OR AS A WHOLE WITHOUT THE WRITTEN PERMISSION OF ***FIRST®*** IS PROHIBITED.

NEXT ASSY	USED ON
APPLICATION	

UNLESS OTHERWISE SPECIFIED:

DIMENSIONS ARE IN INCHES
TOLERANCES:
FRACTIONAL ±1/16
ANGULAR: MACH ±1° BEND ±1°
TWO PLACE DECIMAL ±.01
THREE PLACE DECIMAL ±.001

INTERPRET GEOMETRIC TOLERANCING PER:

MATERIAL

FINISH

DO NOT SCALE DRAWING

	NAME	DATE
DRAWN		
CHECKED		
ENG APPR.		
MFG APPR.		
Q.A.		

COMMENTS:

FIRST ROBOTICS COMPETITION

SOLIDWORKS Modeling Solutions Partner

TITLE:

TE Power Port

SIZE	DWG. NO.	REV
A	TE-20003	

SCALE: 1:32 WEIGHT: SHEET 6 OF 16

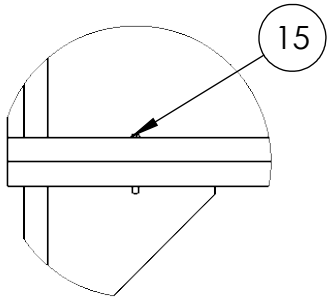

DETAIL M
SCALE 1 : 12

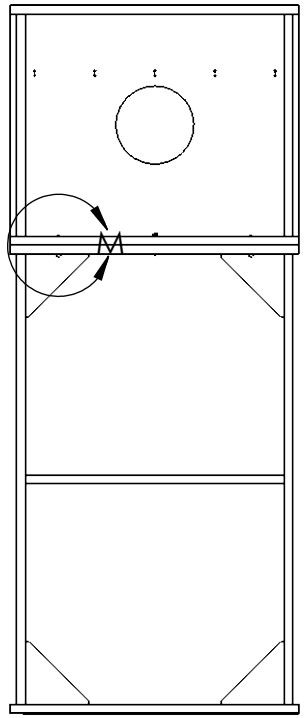

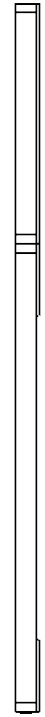

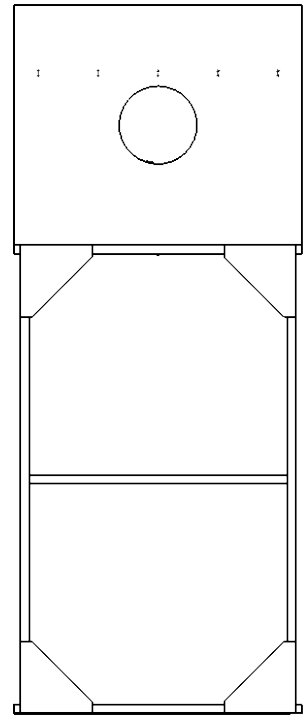

Nores:

1. Attach Back Lower Frame Assembly and Back Upper Frame Assembly together with 15

		UNLESS OTHERWISE SPECIFIED:		NAME	DATE
		DIMENSIONS ARE IN INCHES TOLERANCES: FRACTIONAL ±1/16 ANGULAR: MACH ±1° BEND ±1° TWO PLACE DECIMAL ±.01 THREE PLACE DECIMAL ±.001	DRAWN		
			CHECKED		
			ENG APPR.		
			MFG APPR.		
		INTERPRET GEOMETRIC TOLERANCING PER:	Q.A.		
		MATERIAL	COMMENTS:		
NEXT ASSY	USED ON	FINISH			
APPLICATION		DO NOT SCALE DRAWING			

PROPRIETARY AND CONFIDENTIAL

THE INFORMATION CONTAINED IN THIS DRAWING IS THE SOLE PROPERTY OF ***FIRST®***. Any REPRODUCTION IN PART OR AS A WHOLE WITHOUT THE WRITTEN PERMISSION OF ***FIRST®*** IS PROHIBITED.

FIRST ROBOTICS COMPETITION

SOLIDWORKS Modeling Solutions Partner

TITLE:

TE Power Port

SIZE	DWG. NO.	REV
A	TE-20003	
SCALE: 1:32	WEIGHT:	SHEET 7 OF 16

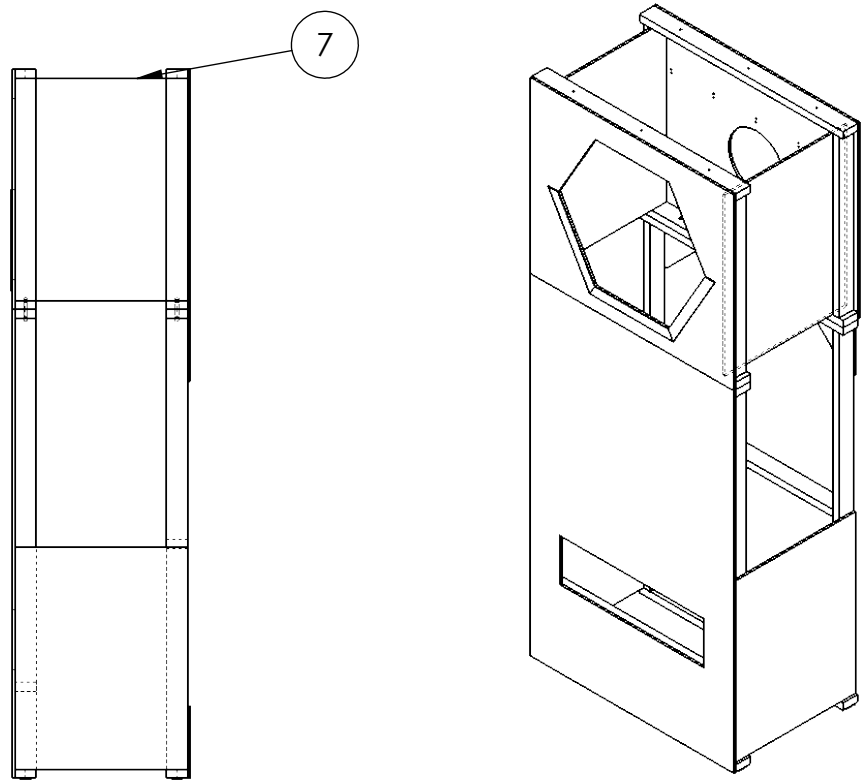

Notes:

1. Attach (7) to the out side of the lower two frames on both sides. Pre-drill and use 1.25" wood screws
2. Attach (7) to the inside of the upper two frames on both sides. Pre-drill and use 1.25" wood screws
3. Assemble on its side on the ground

PROPRIETARY AND CONFIDENTIAL

THE INFORMATION CONTAINED IN THIS DRAWING IS THE SOLE PROPERTY OF ***FIRST®***. Any REPRODUCTION IN PART OR AS A WHOLE WITHOUT THE WRITTEN PERMISSION OF ***FIRST®*** IS PROHIBITED.

NEXT ASSY	USED ON
APPLICATION	

UNLESS OTHERWISE SPECIFIED:

DIMENSIONS ARE IN INCHES
TOLERANCES:
FRACTIONAL ±1/16
ANGULAR: MACH ±1° BEND ±1°
TWO PLACE DECIMAL ±.01
THREE PLACE DECIMAL ±.001

INTERPRET GEOMETRIC TOLERANCING PER:

MATERIAL

FINISH

DO NOT SCALE DRAWING

	NAME	DATE
DRAWN		
CHECKED		
ENG APPR.		
MFG APPR.		
Q.A.		

COMMENTS:

FIRST ROBOTICS COMPETITION

SOLIDWORKS Modeling Solutions Partner

TITLE:

TE Power Port

SIZE	DWG. NO.	REV
A	TE-20003	

SCALE: 1:32 WEIGHT: SHEET 8 OF 16

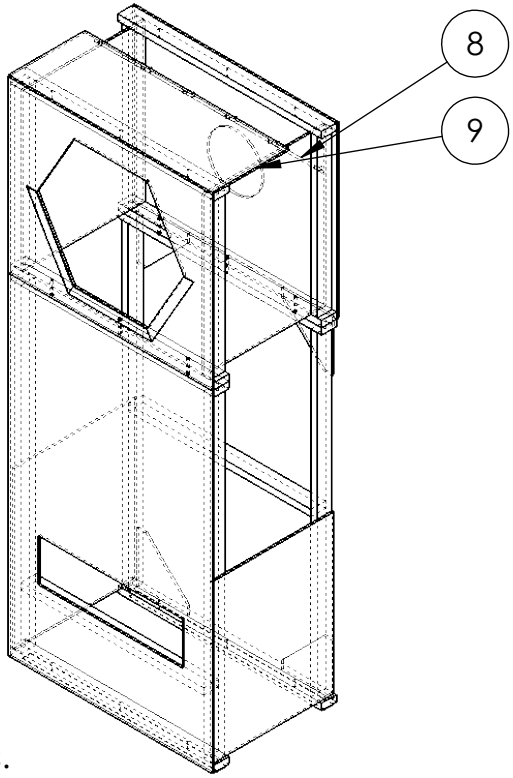

Notes:

1. Attach (9) to upper frame assembly with 1.25" wood screws.
2. Attach (8) to (9) and upper back assembly with 50lb Cable ties.

PROPRIETARY AND CONFIDENTIAL

THE INFORMATION CONTAINED IN THIS DRAWING IS THE SOLE PROPERTY OF ***FIRST®***. Any REPRODUCTION IN PART OR AS A WHOLE WITHOUT THE WRITTEN PERMISSION OF ***FIRST®*** IS PROHIBITED.

NEXT ASSY	USED ON
APPLICATION	

UNLESS OTHERWISE SPECIFIED:

DIMENSIONS ARE IN INCHES
TOLERANCES:
FRACTIONAL ±1/16
ANGULAR: MACH ±1° BEND ±1°
TWO PLACE DECIMAL ±.01
THREE PLACE DECIMAL ±.001

INTERPRET GEOMETRIC TOLERANCING PER:

MATERIAL

FINISH

DO NOT SCALE DRAWING

	NAME	DATE
DRAWN		
CHECKED		
ENG APPR.		
MFG APPR.		
Q.A.		

COMMENTS:

FIRST ROBOTICS COMPETITION

SOLIDWORKS Modeling Solutions Partner

TITLE:

TE Power Port

SIZE	DWG. NO.	REV
A	TE-20003	

SCALE: 1:32 WEIGHT: SHEET 9 OF 16

TE-20003-01
QTY (1)

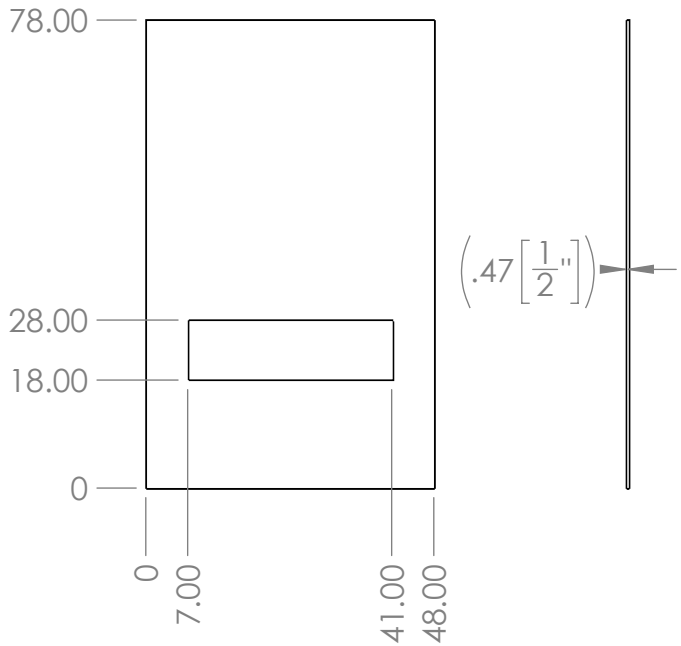

Notes:
1. Material: 15/32 (1/2") AC or CDX Plywood

TE-20003-02
QTY (1)

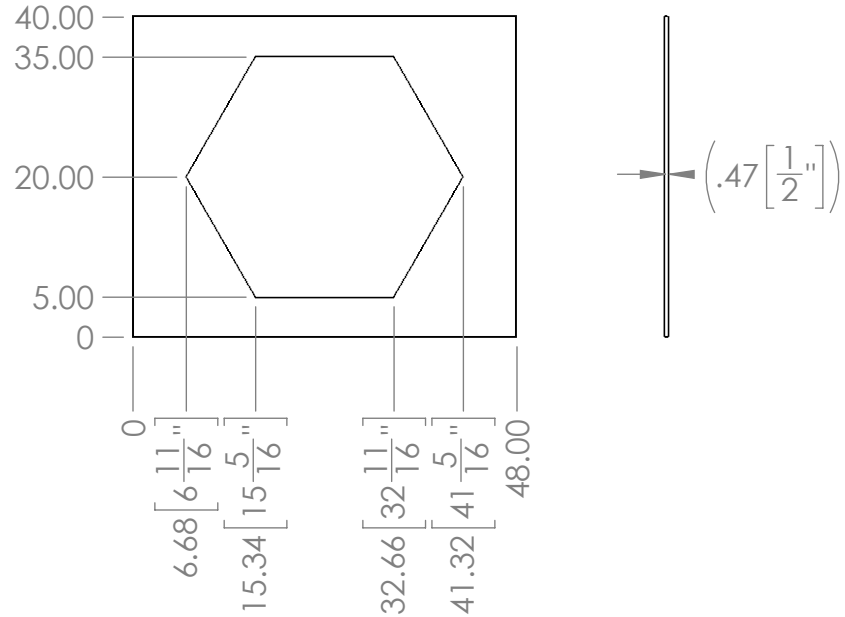

Notes:
1. Material: 15/32 (1/2") AC or CDX Plywood

PROPRIETARY AND CONFIDENTIAL

THE INFORMATION CONTAINED IN THIS DRAWING IS THE SOLE PROPERTY OF ***FIRST®***. Any REPRODUCTION IN PART OR AS A WHOLE WITHOUT THE WRITTEN PERMISSION OF ***FIRST®*** IS PROHIBITED.

NEXT ASSY	USED ON
APPLICATION	

UNLESS OTHERWISE SPECIFIED:

DIMENSIONS ARE IN INCHES
TOLERANCES:
FRACTIONAL ±1/16
ANGULAR: MACH ±1° BEND ±1°
TWO PLACE DECIMAL ±.01
THREE PLACE DECIMAL ±.001

INTERPRET GEOMETRIC TOLERANCING PER:

MATERIAL

FINISH

DO NOT SCALE DRAWING

	NAME	DATE
DRAWN		
CHECKED		
ENG APPR.		
MFG APPR.		
Q.A.		

COMMENTS:

FIRST ROBOTICS COMPETITION

SOLIDWORKS Modeling Solutions Partner

TITLE:

TE Power Port

SIZE	DWG. NO.	REV
A	TE-20003	

SCALE: 1:32 WEIGHT: SHEET 10 OF 16

TE-20003-03
QTY (1)

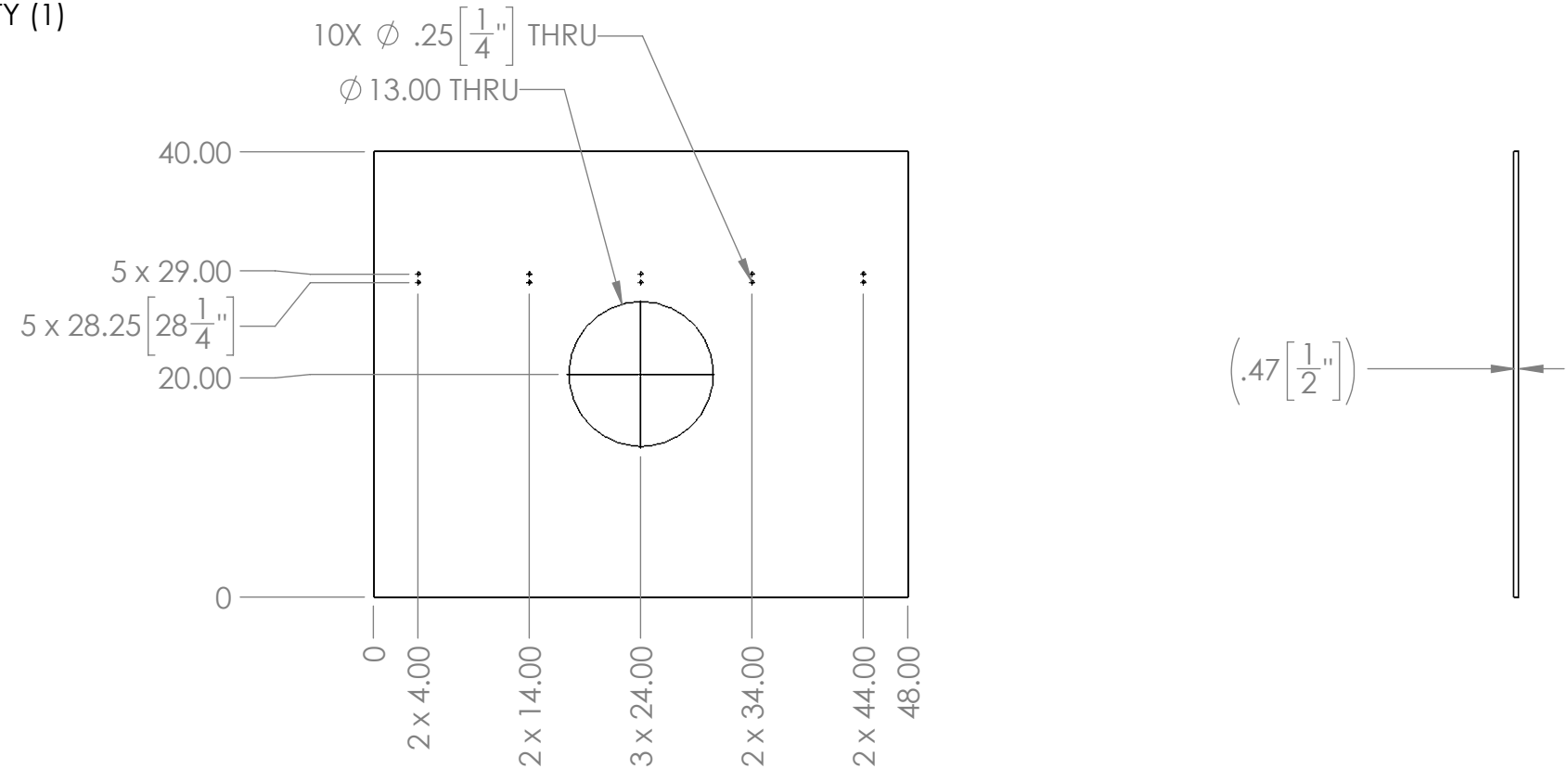

Notes:
1. Material: 15/32 (1/2") AC or CDX Plywood
2. 10X ∅ .25 [1/4"] THRU optional if adding deflector

		UNLESS OTHERWISE SPECIFIED:		NAME	DATE
		DIMENSIONS ARE IN INCHES TOLERANCES: FRACTIONAL ±1/16 ANGULAR: MACH ±1° BEND ±1° TWO PLACE DECIMAL ±.01 THREE PLACE DECIMAL ±.001	DRAWN		
			CHECKED		
			ENG APPR.		
			MFG APPR.		
		INTERPRET GEOMETRIC TOLERANCING PER:	Q.A.		
		MATERIAL	COMMENTS:		
NEXT ASSY	USED ON	FINISH			
APPLICATION		DO NOT SCALE DRAWING			

PROPRIETARY AND CONFIDENTIAL
THE INFORMATION CONTAINED IN THIS DRAWING IS THE SOLE PROPERTY OF ***FIRST®***. Any REPRODUCTION IN PART OR AS A WHOLE WITHOUT THE WRITTEN PERMISSION OF ***FIRST®*** IS PROHIBITED.

FIRST ROBOTICS COMPETITION
SOLIDWORKS Modeling Solutions Partner

TITLE:
TE Power Port

SIZE	DWG. NO.	REV
A	TE-20003	
SCALE: 1:32	WEIGHT:	SHEET 11 OF 16

TE-20003-07
QTY (4)

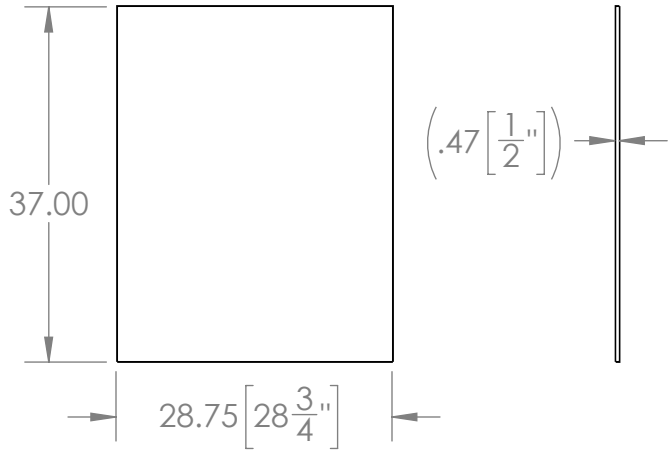

Notes:
1. Material: 15/32 (1/2") AC or CDX Plywood

TE-20003-08
QTY (1)

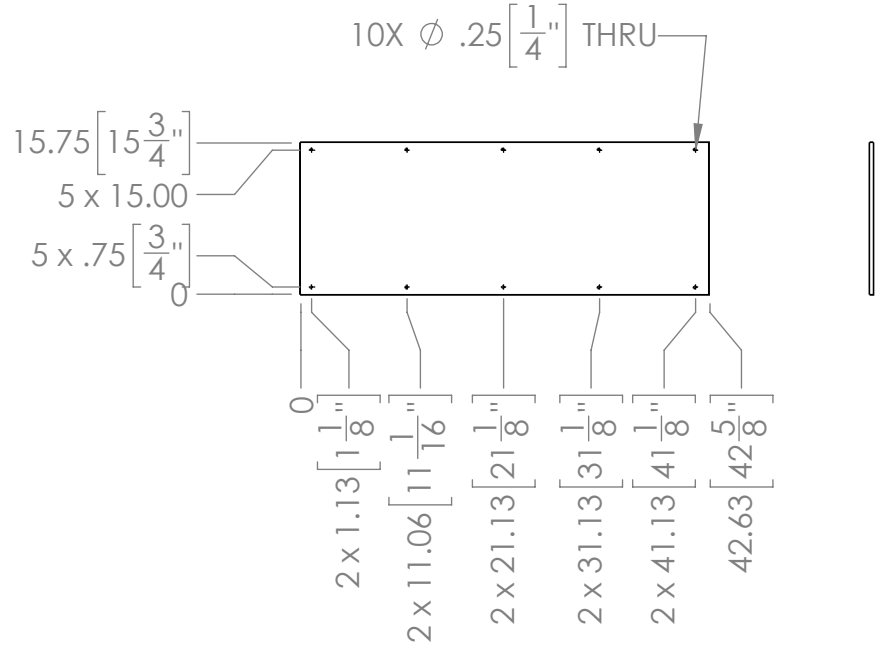

Notes:
1. Material: 15/32 (1/2") AC or CDX Plywood
2. This is an optional part

PROPRIETARY AND CONFIDENTIAL

THE INFORMATION CONTAINED IN THIS DRAWING IS THE SOLE PROPERTY OF ***FIRST®***. Any REPRODUCTION IN PART OR AS A WHOLE WITHOUT THE WRITTEN PERMISSION OF ***FIRST®*** IS PROHIBITED.

NEXT ASSY	USED ON
APPLICATION	

UNLESS OTHERWISE SPECIFIED:

DIMENSIONS ARE IN INCHES
TOLERANCES:
FRACTIONAL ±1/16
ANGULAR: MACH ±1° BEND ±1°
TWO PLACE DECIMAL ±.01
THREE PLACE DECIMAL ±.001

INTERPRET GEOMETRIC TOLERANCING PER:

MATERIAL

FINISH

DO NOT SCALE DRAWING

	NAME	DATE
DRAWN		
CHECKED		
ENG APPR.		
MFG APPR.		
Q.A.		

COMMENTS:

FIRST ROBOTICS COMPETITION

SOLIDWORKS Modeling Solutions Partner

TITLE:

TE Power Port

SIZE	DWG. NO.	REV
A	TE-20003	

SCALE: 1:32 WEIGHT: SHEET 12 OF 16

TE-20003-09
QTY (1)

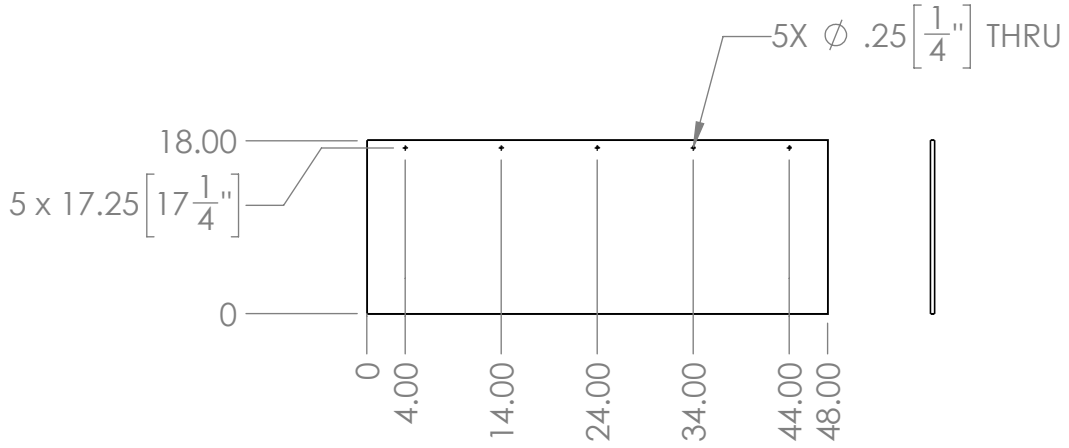

Notes:
1. Material: 15/32 (1/2") AC or CDX Plywood
2. This is an optional part

TE-20003-10
QTY (4)

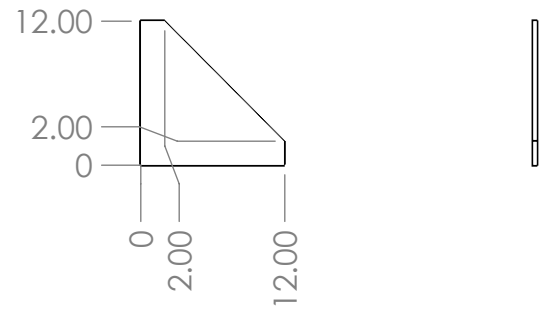

Notes:
1. Material: 15/32 (1/2") AC or CDX Plywood

		UNLESS OTHERWISE SPECIFIED:		NAME	DATE
		DIMENSIONS ARE IN INCHES TOLERANCES: FRACTIONAL ±1/16 ANGULAR: MACH ±1° BEND ±1° TWO PLACE DECIMAL ±.01 THREE PLACE DECIMAL ±.001	DRAWN		
			CHECKED		
			ENG APPR.		
			MFG APPR.		
		INTERPRET GEOMETRIC TOLERANCING PER:	Q.A.		
		MATERIAL	COMMENTS:		
NEXT ASSY	USED ON	FINISH			
APPLICATION		DO NOT SCALE DRAWING			

PROPRIETARY AND CONFIDENTIAL
THE INFORMATION CONTAINED IN THIS DRAWING IS THE SOLE PROPERTY OF ***FIRST®***. Any REPRODUCTION IN PART OR AS A WHOLE WITHOUT THE WRITTEN PERMISSION OF ***FIRST®*** IS PROHIBITED.

FIRST ROBOTICS COMPETITION
SOLIDWORKS Modeling Solutions Partner

TITLE:
TE Power Port

SIZE	DWG. NO.	REV
A	TE-20003	
SCALE: 1:32	WEIGHT:	SHEET 13 OF 16

TE-20003-04
QTY (8)

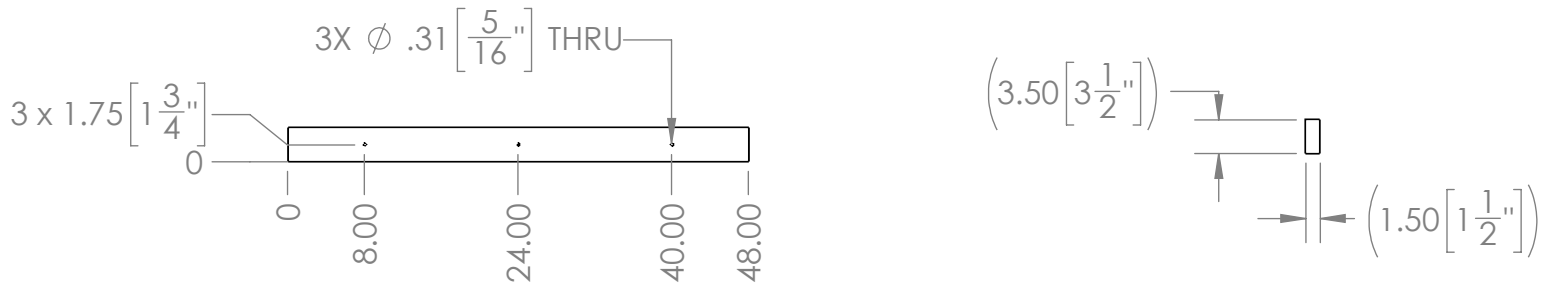

Notes:
1. 2x4" Pine Lumber

TE-20003-05
QTY (4)

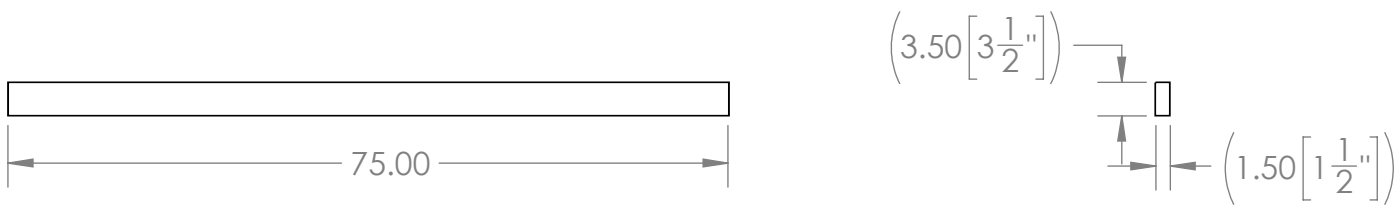

Notes:
1. 2x4" Pine Lumber

PROPRIETARY AND CONFIDENTIAL
THE INFORMATION CONTAINED IN THIS DRAWING IS THE SOLE PROPERTY OF ***FIRST®***. Any REPRODUCTION IN PART OR AS A WHOLE WITHOUT THE WRITTEN PERMISSION OF ***FIRST®*** IS PROHIBITED.

NEXT ASSY	USED ON
APPLICATION	

UNLESS OTHERWISE SPECIFIED:
DIMENSIONS ARE IN INCHES
TOLERANCES:
FRACTIONAL ±1/16
ANGULAR: MACH ±1° BEND ±1°
TWO PLACE DECIMAL ±.01
THREE PLACE DECIMAL ±.001
INTERPRET GEOMETRIC TOLERANCING PER:
MATERIAL
FINISH
DO NOT SCALE DRAWING

	NAME	DATE
DRAWN		
CHECKED		
ENG APPR.		
MFG APPR.		
Q.A.		

COMMENTS:

FIRST ROBOTICS COMPETITION
SOLIDWORKS Modeling Solutions Partner

TITLE:
TE Power Port

SIZE	DWG. NO.	REV
A	TE-20003	

SCALE: 1:32 WEIGHT: SHEET 14 OF 16

TE-20003-06
QTY (4)

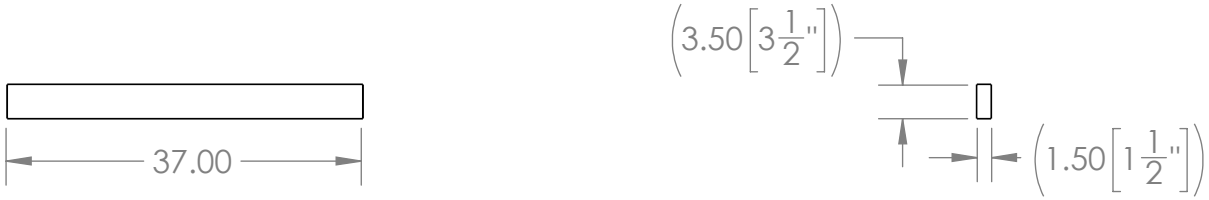

Notes:
1. 2x4" Pine Lumber

TE-20003-11
QTY (2)

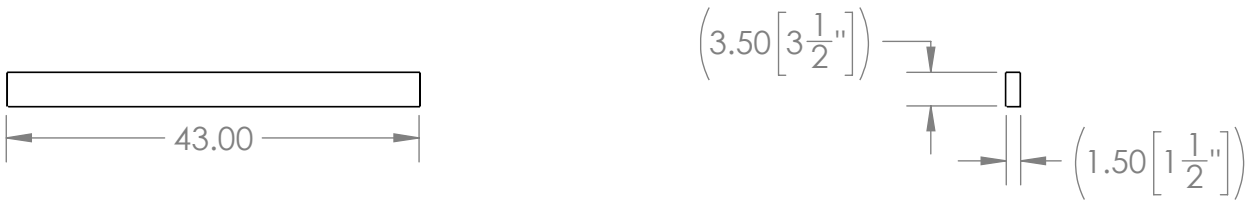

Notes:
1. 2x4" Pine Lumber

PROPRIETARY AND CONFIDENTIAL

THE INFORMATION CONTAINED IN THIS DRAWING IS THE SOLE PROPERTY OF ***FIRST®***. Any REPRODUCTION IN PART OR AS A WHOLE WITHOUT THE WRITTEN PERMISSION OF ***FIRST®*** IS PROHIBITED.

NEXT ASSY	USED ON
APPLICATION	

UNLESS OTHERWISE SPECIFIED:

DIMENSIONS ARE IN INCHES
TOLERANCES:
FRACTIONAL ±1/16
ANGULAR: MACH ±1° BEND ±1°
TWO PLACE DECIMAL ±.01
THREE PLACE DECIMAL ±.001

INTERPRET GEOMETRIC TOLERANCING PER:

MATERIAL

FINISH

DO NOT SCALE DRAWING

	NAME	DATE
DRAWN		
CHECKED		
ENG APPR.		
MFG APPR.		
Q.A.		

COMMENTS:

FIRST ROBOTICS COMPETITION
SOLIDWORKS Modeling Solutions Partner

TITLE:
TE Power Port

SIZE	DWG. NO.	REV
A	TE-20003	

SCALE: 1:32 WEIGHT: SHEET 15 OF 16

Vision_PowerPort
QTY (3)

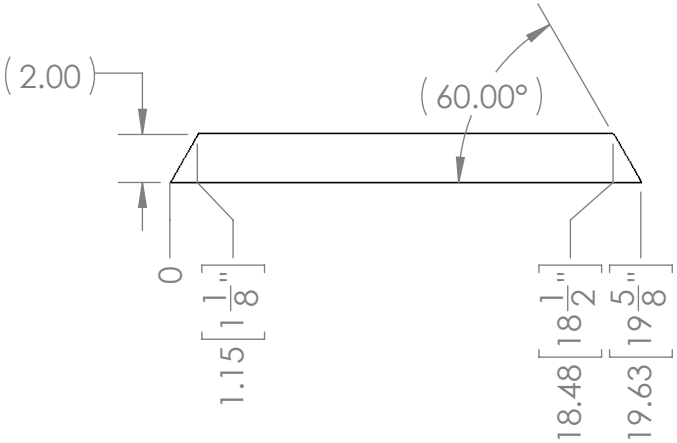

Notes:
1. 2" Wide, 3M 8830 Scotchlite Reflective Material

Hook_2_48
QTY (2)

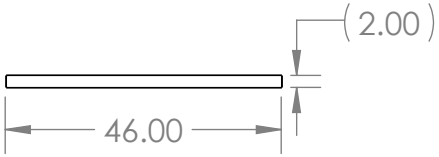

Notes:
1. 2" wide Hook

		UNLESS OTHERWISE SPECIFIED:		NAME	DATE
		DIMENSIONS ARE IN INCHES TOLERANCES: FRACTIONAL ±1/16 ANGULAR: MACH ±1° BEND ±1° TWO PLACE DECIMAL ±.01 THREE PLACE DECIMAL ±.001	DRAWN		
			CHECKED		
			ENG APPR.		
			MFG APPR.		
		INTERPRET GEOMETRIC TOLERANCING PER:	Q.A.		
		MATERIAL	COMMENTS:		
NEXT ASSY	USED ON	FINISH			
APPLICATION		DO NOT SCALE DRAWING			

PROPRIETARY AND CONFIDENTIAL
THE INFORMATION CONTAINED IN THIS DRAWING IS THE SOLE PROPERTY OF ***FIRST®***. Any REPRODUCTION IN PART OR AS A WHOLE WITHOUT THE WRITTEN PERMISSION OF ***FIRST®*** IS PROHIBITED.

FIRST ROBOTICS COMPETITION
SOLIDWORKS Modeling Solutions Partner

TITLE:
TE Power Port

SIZE	DWG. NO.	REV
A	TE-20003	
SCALE: 1:32	WEIGHT:	SHEET 16 OF 16