HOW TO MAKE PIXEL ART!

Jasmine Florentine
Mechanical Engineer (and occasional artist) at *FIRST*®

WITH A PROGRAM

There's online programs that will automatically convert an image or photo into pixel art for you, as well as tutorials on how to do it in Photoshop (here's one I haven't tested, but looks good: https://www.shutterstock.com/blog/how-to-turn-any-photograph-into-pixel-art-with-photoshop). These images tend to be higher resolution than the faux-8-bit pixel art that you'll see in this tutorial, but depending on the size of the image it can be faster than doing it by hand.

FROM SCRATCH

Basically, you build it pixel by pixel. It's pretty much drawing, but limited to using individual pixels.

I used Photoshop for my art. You can download a free trial of Photoshop, or use another software. The process is mostly the same in any other image editing software. You can use a free program like GIMP, and there's also some apps designed specifically for creating pixel art, like http://makepixelart.com/free/ and http://pixelartmaker.com/. (Full disclosure, I haven't used either program extensively, but they look neat).

THE PROCESS

1) Create a new canvas. It should be really small, something like 100 x 100 pixels.
2) To show a pixel grid in Photoshop, go to View → Show →Pixel Grid.
3) Select the pencil tool, and set it to 1 pixel.
4) Draw. (Duh.) You'll find it's usually simplest to stick to horizontal, vertical, and 45-degree lines where possible.

You can draw entirely from scratch (like I did with the robots), or use another image to guide you. For instance, here's how I made the 2017 *FIRST*® STEAMWORKS℠ Airship:

5) Grab an image of the airship. I used the one from p. 21 of the Manual.

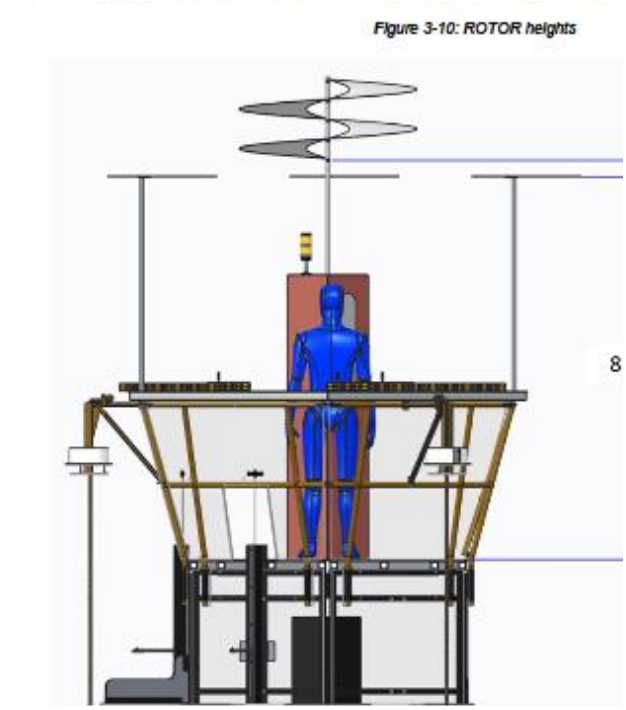

6) Open it in Photoshop, then go to Image → Image Size and shrink the file down to somewhere around 80 x 80 pixels. There's several options for how it'll resample the image – I just went with Automatic, since I'm going to use the image only for reference.

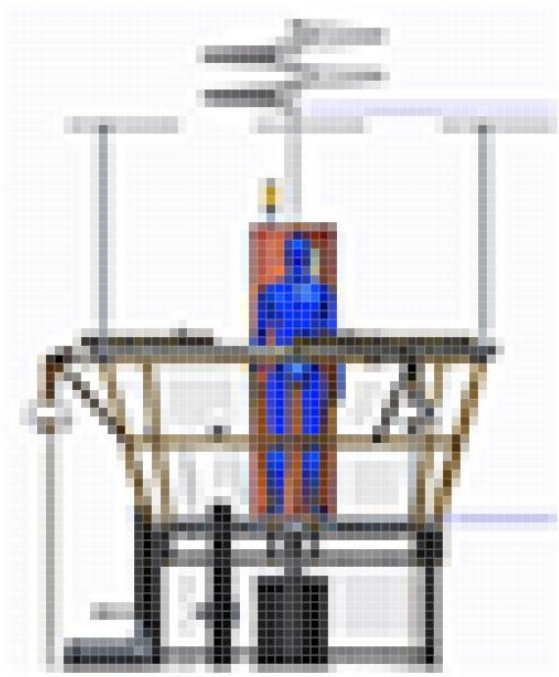

Work of art right here.

7) Unfortunately resizing it looks pretty blurry and mediocre, which is why I manually redrew the airship pixel by pixel (it sounds tedious but it didn't actually take very long. There's not very many pixels to it.)

8) Create a new layer on top of the original image, so you can trace over the original image. I also dropped the opacity on the reference image to make it easier to see.

9) This is where you need to start using your artistic sense. I started by tracing over the big elements like the floor and railings. I played around with some of the distances and proportions as well – the goal is to make something that looks good, not necessarily accurate. For instance, from the perspective of the drawing, only one of the davits and touchpads is in profile. I chose to make it symmetrical in the pixel art for clarity.

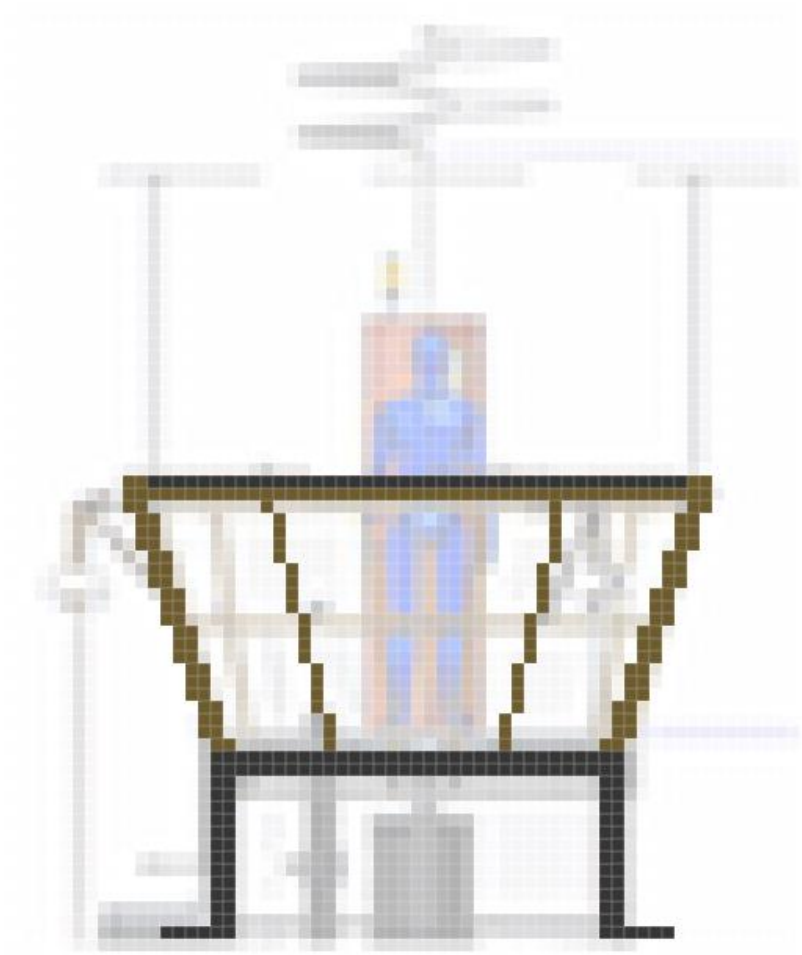

10) Similarly, this is a tiny piece of art, so you can't include all the details. I chose to cut out or simplify elements like the feet, the springs, etc. I also made the DaVinci propeller taller since it started to get kind of messy when it was that squashed down. That's largely because it's difficult to make curved shapes in pixelated form. If you look at coins from old video games, you'll note they're usually just squares or rectangles with the corners removed to make them look rounder.

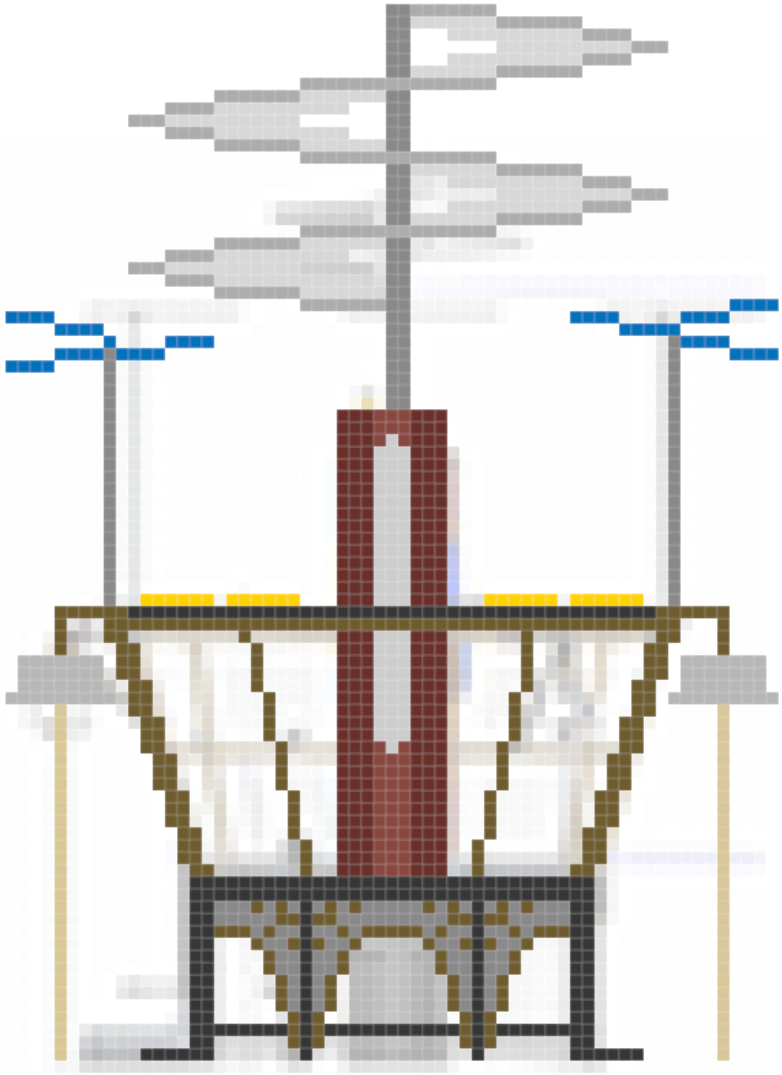

11) Eventually you'll want to scale the image back up so you can actually use it. In Photoshop, the way to do this without creating a blurry mess is to set the Resample setting to "Nearest Neighbor (hard edges)". If you're not using Photoshop, you'll have to look up the appropriate settings for your software.

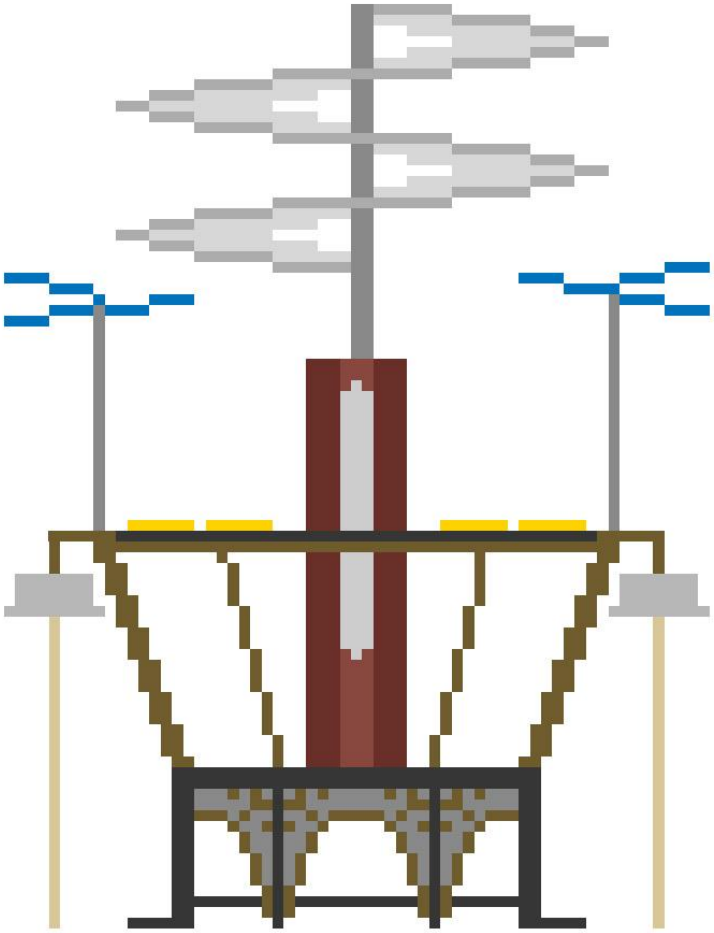

Ta-da! That's how it's done!